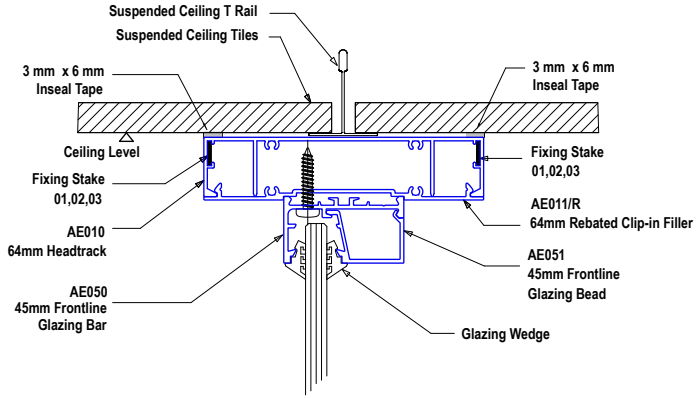
Suspended Ceiling T Rail
Suspended Ceiling Tiles
3 mm x 6 mm
Inseal Tape
3 mm x 6 mm
Inseal Tape
Ceiling Level
Fixing Stake
01,02,03
Fixing Stake
01,02,03
AE011/R
64mm Rebated Clip-in Filler
AE010
64mm Headtrack
AE051
45mm Frontline
Glazing Bead
AE050
45mm Frontline
Glazing Bar
Glazing Wedge

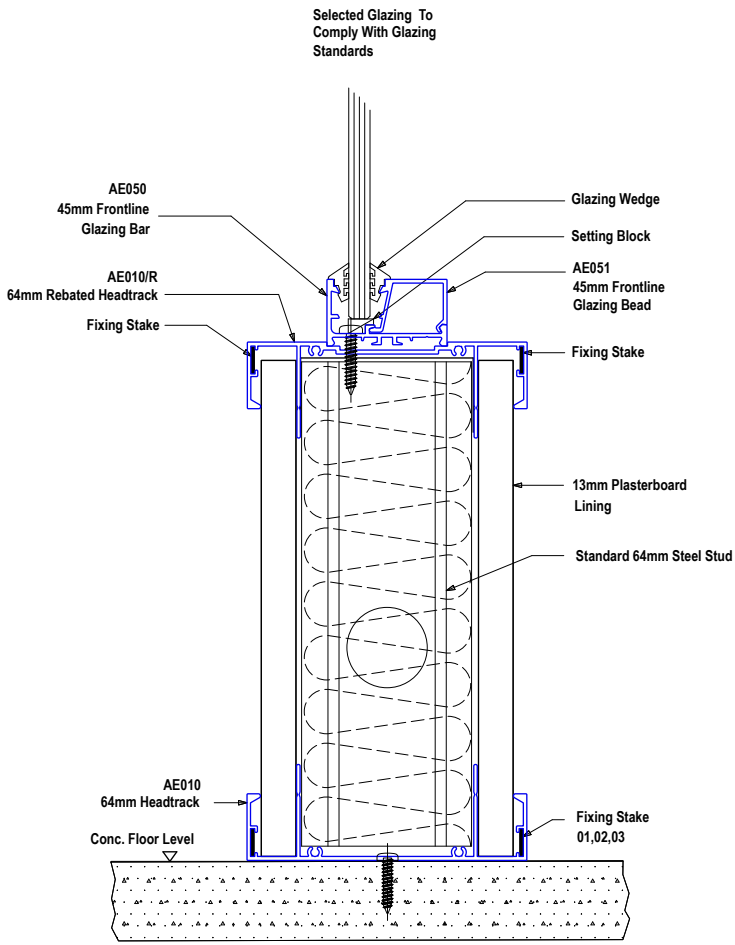
Selected Glazing To
Comply With Glazing
Standards
AE050
45mm Frontline
Glazing Bar
Glazing Wedge
Setting Block
AE010/R
64mm Rebated Headtrack
AE051
45mm Frontline
Glazing Bead
Fixing Stake
Fixing Stake
13mm Plasterboard
Lining
Standard 64mm Steel Stud
AE010
64mm Headtrack
Fixing Stake
01,02,03
Conc. Floor Level